THE CARPENTERS' CRAFT COMPETITION COLLEGE AWARD

The Worshipful Company of Carpenters

The Institute of Carpenters

2023 FRAMED, LEDGED & BRACED DOOR

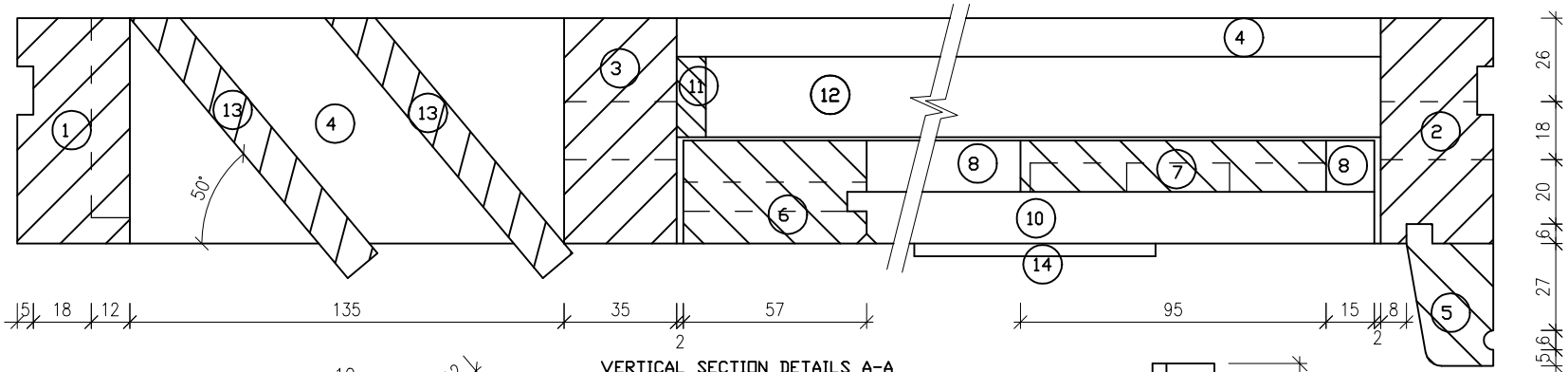

VERTICAL SECTION DETAILS A-A

NOT TO SCALE
PLAN REDUCED FROM A2

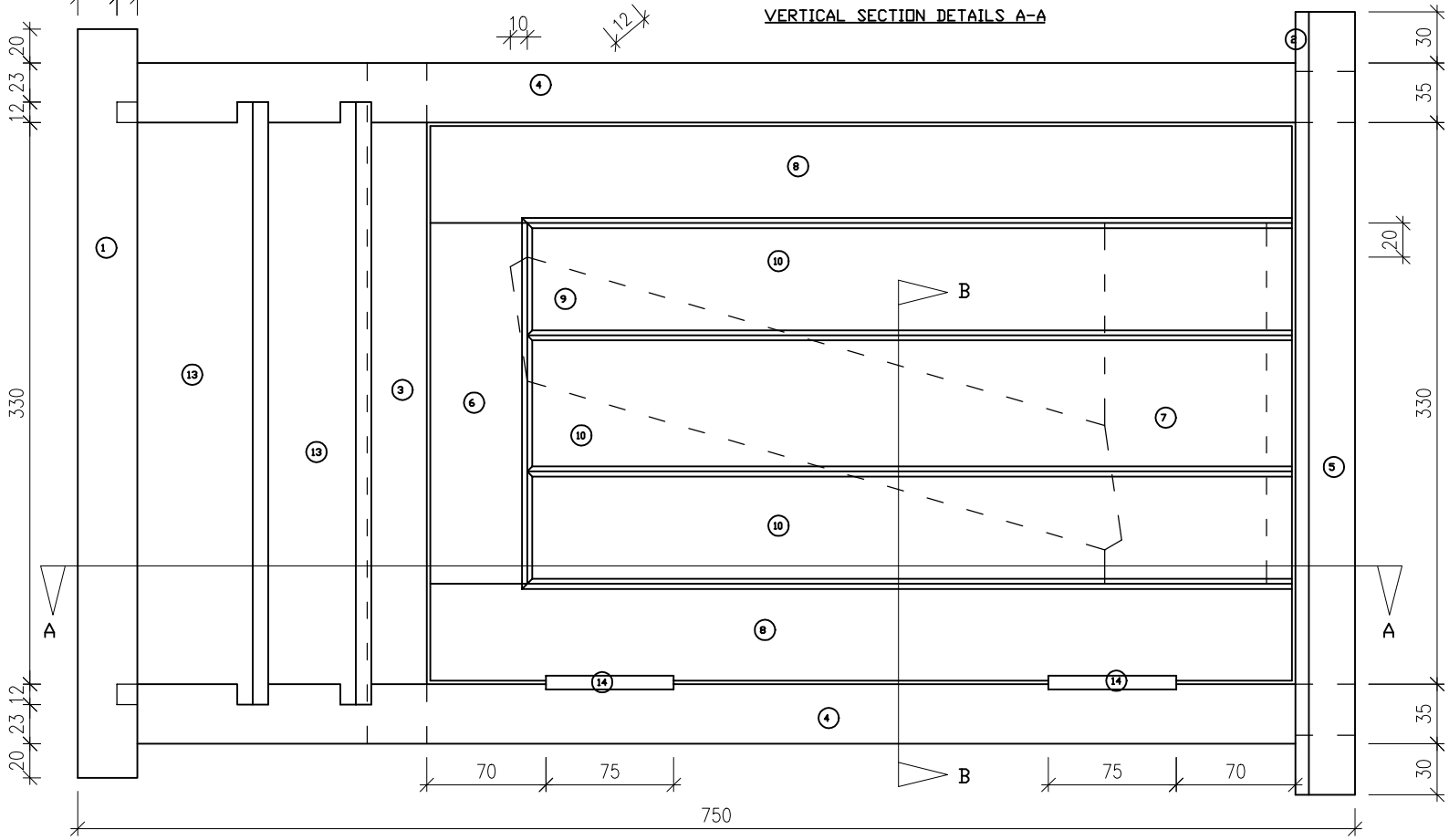

EXTERNAL ELEVATION

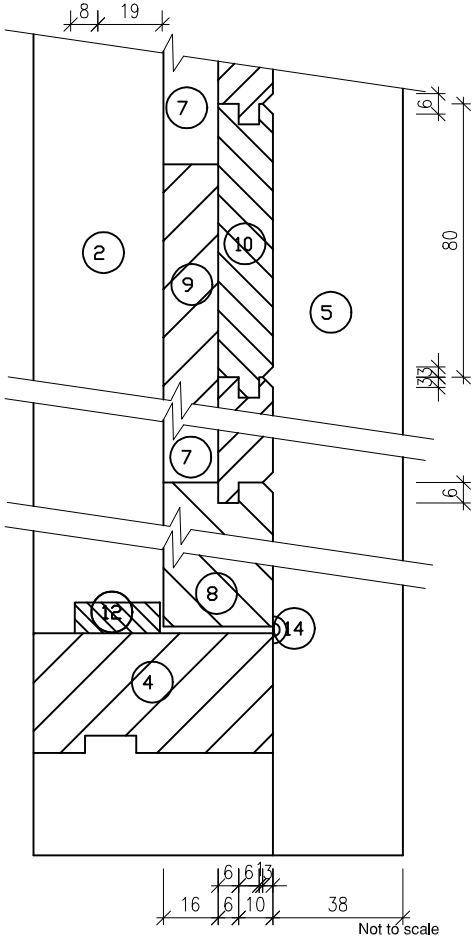

HORIZONTAL SECTION DETAILS B-B

Not to scale

© Designed by Don Stevens and drawn by Ken Hall